Poles	DIM.A	DIM.B
2x1P	–	6.65
2x2P	3.00	9.65
2x3P	6.00	12.65
2x4P	9.00	15.65
2x5P	12.00	18.65
2x6P	15.00	21.65
2x7P	18.00	24.65
2x8P	21.00	27.65
2x9P	24.00	30.65
2x10P	27.00	33.65
2x11P	30.00	36.65
2x12P	33.00	39.65

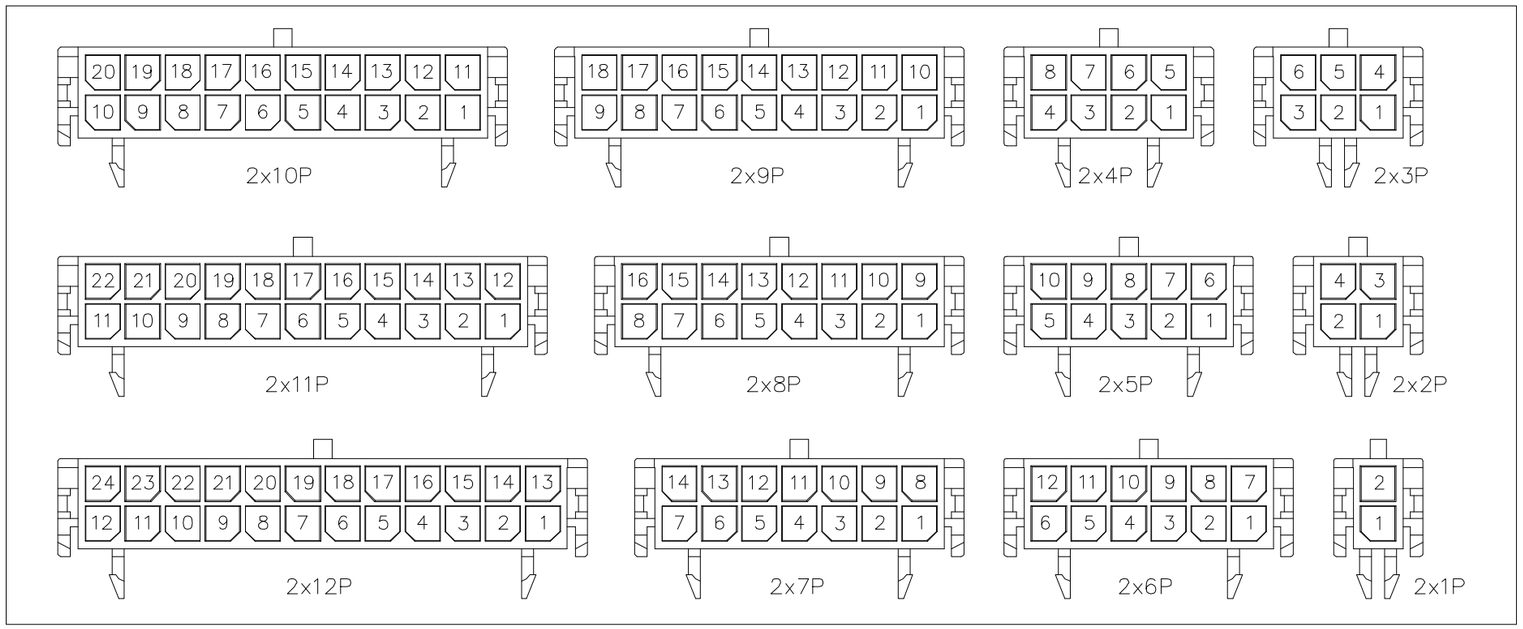

SPECIFICATION:

- Voltage rating:
  AC, DC, 250V(rms)
- Current rating:
  5A AWG #20
- Withstand voltage:
  1000V AC/minute
- Working Temperature:
  -25°C~ +85°C
- Insulation resistance:
  ≥1000MΩ
- Contact resistance:
  ≤10mΩ
- Terminal mtr'l:
  BRASS
- Material:
  Housing-PA9T,UL94V-0
- Applicable Wire:
  AWG #24~ AWG #20

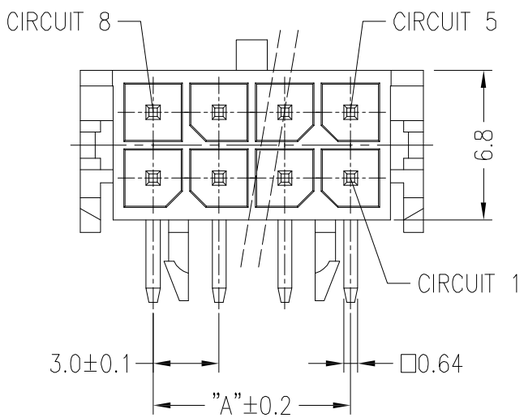

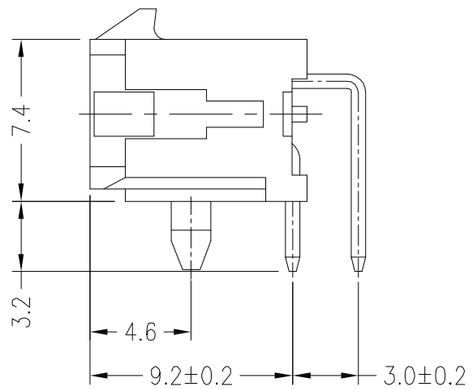

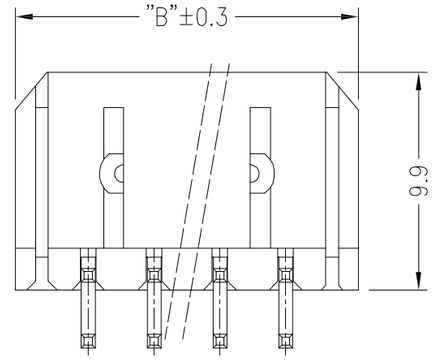

RoHS Compliant

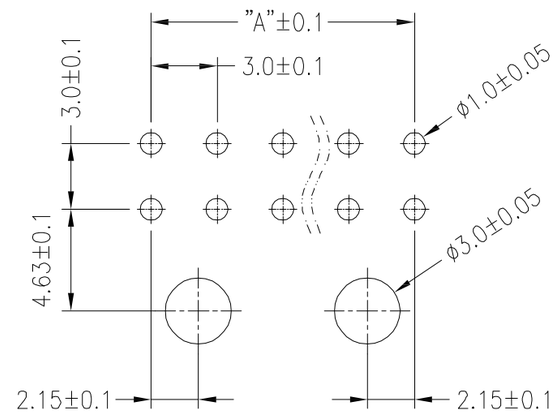

RECOMMENDED PCB LAYOUT

Ordering Information

WJ	5	XX	PT	A B-44
3.0Ph Wafer	Solder/PCB 5:DIP Right Angle	02~24Pin	Contact Plated PT: Tin	Packaging B: Bag

REV.	REVISION RECORD	DATE
A	Original	07/10/24'

General Tolerances
LINEAR 0.0 ±0.35 / 0.00±0.20 ANGLES ±3°

UNIT: mm	
A4	NAME
APPROVED	WENDY
DESIGNER	WHITE
DRAWN	ANGEL

ARIBA TECHNOLOGY CO., LTD.

TITLE: 3.0Ph Wafer DIP Right Angle Dual Rows 7.4H

DWG.NO.: WJ5XXPTAB-44 REV. A

SCALE 1 : 1 SHEET 1 OF 1